Fabrication and Characterization of Nanolayer Capacitors

Robert Chow and Alan D. Ellis
Lawrence Livermore National Laboratory
7000 East Ave. L-142
Livermore, CA 94550
1-925-422-7615 (desk)
1-925-423-5846 (fax)
Chow3@llnl.gov

Abstract

The miniaturization of high-power electronics entails concurrent miniaturization of capacitors because they are typically the largest electronic component. Thin-film processing provides a revolutionary approach to make such capacitors smaller. Thin-film processing is performed in a vacuum chamber where a reactive sputtering process is integrated with shadow-masking to make nanolayered capacitors. A plasma emission monitor was used to determine the minimum oxygen-to-argon flow ratio for nonabsorbing niobium oxides. The electrical characteristics of single-stack capacitors were determined as a function of target voltage and the oxygen-to-argon flow ratio. Deposition rates of the niobium oxides are also presented.

A particular run of single-stack capacitors produced 35 capacitors with an average capacitance of 5.3 ± 0.9 nF and an average dissipation factor of 5.3 ± 1.4 mD. In this run, a capacitor had a maximum breakdown electric field strength of 4.8 MV/cm and an energy density of 31.8 Joules/cc.

Introduction

Over the last decade, Lawrence Livermore National Laboratory (LLNL) has been miniaturizing passive electrical components for high-power applications. The picture in Figure 1 exemplifies the footprint reduction of the capacitors over the years from 2.2 to 0.48 cm^2. The key factor in component miniaturization is the nanolayered (NL) technology, especially in the fabrication of high-voltage, high-energy-density capacitors. The physical vapor deposition process used to apply the various layers of the capacitors in a thin profile will be described: specifically, the dielectric layer of niobium oxide. Niobium oxide is a material with a high dielectric constant of 40, and it is a good candidate for making high-energy-density capacitors. The coating process is controlled to minimize particulation and material defect generation in the capacitive device. The NL technology produces rugged capacitors that are all solid-state, compact in volume, monolithic, and with profiles on the order of a micron/nF. Besides military applications, the capacitor research may have commercial uses in areas like transportation systems using electric propulsion, utilities, manufacturing controls, consumer appliances, and medical equipment.

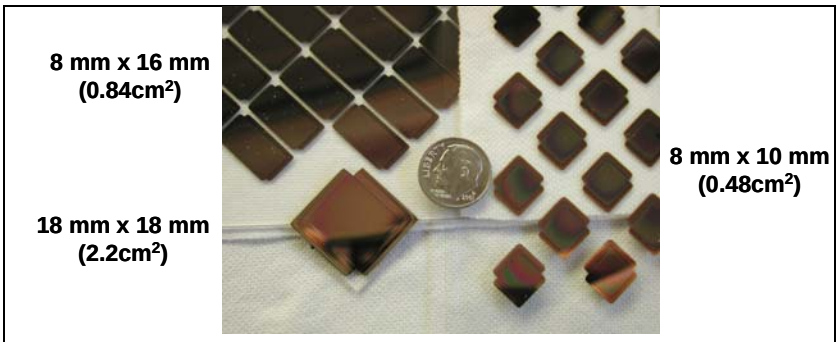

Figure1.

Picture of nanolayer capacitors showing the progression to smaller footprints.

Experimental Set-up

Sputter System

The NL capacitors are made by integrating a reactive sputtering process and shadow masking. A layout, looking into the sputter chamber, is shown in Figure 2. Cryo- and turbopumps, mounted on the backside of the chamber, were used on the stainless steel chamber to achieve base pressures of 3.3 mPa (4.4×10^{-7} Torr). The sputter pressures are 0.4 (3.0) and 0.93 (7.0) Pa (mTorr) for the metal and oxide depositions, respectively. The substrate and mask assembly was mounted concentrically inside the chamber center (annotated as Substrate Table in Fig. 2) and rotated to a magnetron gun for the desired material to be sputtered. This method of configuring the substrate conveniently allowed conditioning of the targets on the rear of the substrate fixture.

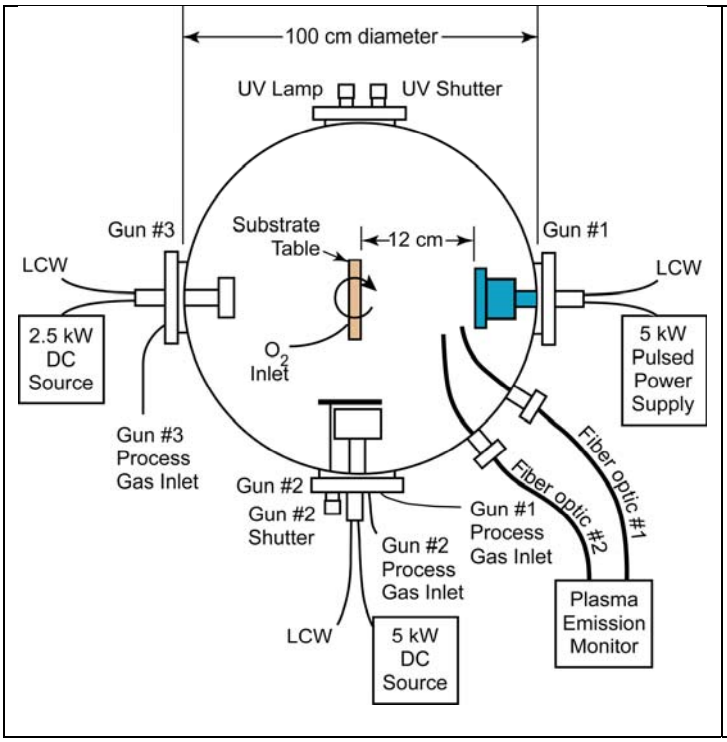

Figure 2. A sketch of the substrate, magnetron, and plasma emission monitoring diagnostic configuration. Gun #1, shaded, is the magnetron containing the Nb target for reactive sputtering of the dielectric oxide. A pulsed DC power supply drives Gun #1. Gun #3 is the magnetron containing the Cu target for deposition of the electrode.

Sputtering is a physical vapor deposition process conducted in a vacuum chamber. A noble gas, typically argon, is used as the plasma carrier medium. A high negative potential is applied across the target material. In magnetron sputtering, this electric field is applied in the presence of a magnetic field to enhance the concentration of and confine the plasma ions near the target surface. Sputtering occurs when the ions accelerate towards and collide with the target, ejecting target material towards the substrate via momentum transfer. For further details of sputtering, the reader is referred to Reference [1].

To create an oxide, the sputtering is conducted in the presence of a partial pressure of oxygen. The primary oxidation reaction of concern occurs on two surfaces: the substrate, which is the desirable surface, and the target, which is the undesirable surface. Target oxidation decreases the deposition rate, which affects throughput, and increases the rate of target arcing, which affects yield. In the LLNL system, the target oxidation is minimized by baffling the oxygen from the target by argon injection within a chimney encircling the target (Figure 3). The target arcing is controlled with a commercial pulsed-DC power supply designed to detect and neutralize potential arcs (Figure 2).

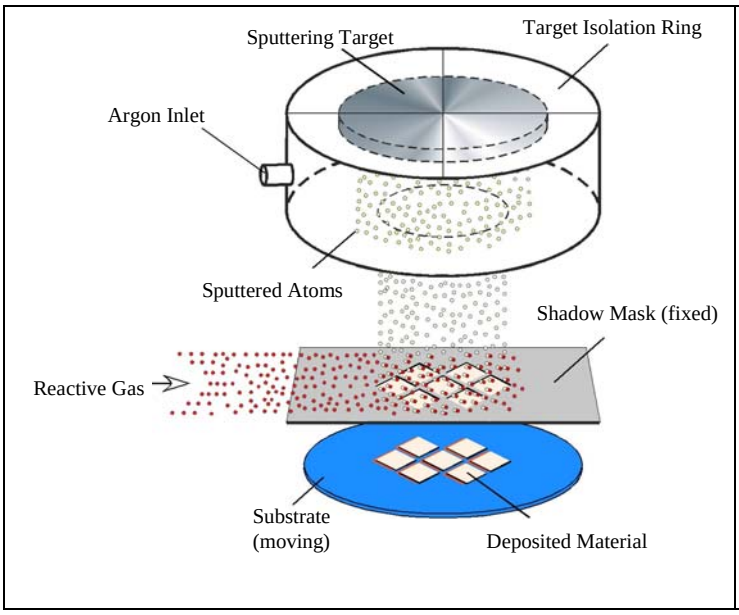

Figure 3. Integrated reactive sputtering process with a shadow mask to make nanolayered capacitors.

Two types of magnetron sputtering sources were used. The electrodes are sputtered with a standard magnetron sputter source. The dielectric oxide is reactively sputtered with a magnetron sputter source built with a rotating magnet array. The rotating magnet array increases the material utilization of the target and the thickness uniformity of the coating. The array was rotated at 480 rpm in this study. As a diagnostic of the reactive sputtering process, a plasma emission monitoring (PEM) system made by Gencoa LTD was installed. Two fiber-optic waveguides were used. One waveguide collects light from the Ar ions and the other waveguide collects light from the sputtered Nb metal ions. The two intensities were combined in a ratio to take out the variations of plasma intensity caused by the rotating magnet array. The PEM was used to control the oxygen flow into the chamber, maintaining a constant oxygen-to-metal concentration for the oxidation reaction.

Shadow Mask

A metal shadow mask is situated between the magnetron source and the substrate. In this case where it defines the geometry of the capacitor, the mask is positioned nearer to the substrate. To separate the electrode and dielectric layers, the substrate is translated linearly with respect to the shadow mask. In three coordinated movements with the magnetrons for coating material, the shadow mask delineates the “negative” electrode, the dielectric, and the “positive” electrode. This sequence cycle can be repeated until the desired number of capacitors have been deposited. The completed device has all the negative electrodes on one side of the capacitor and all the positive electrodes at the opposite side, as shown in Figure 4.

Characterization Equipment

The single stack capacitors were tested for capacitance and dissipation factor using a HP-4194A Impedance/Gain-Phase Analyzer. The capacitance values are reported at a 100 KHz test frequency. Connections between the capacitor samples and analyzer were made with

Inter-Continental Microwave V-Probe manipulators. The high-voltage tests were done at a ramp rate of 100 V/s with a Rod-L M120DC HiPot Tester. Thicknesses were measured on a Veeco DekTak stylus profilometer.

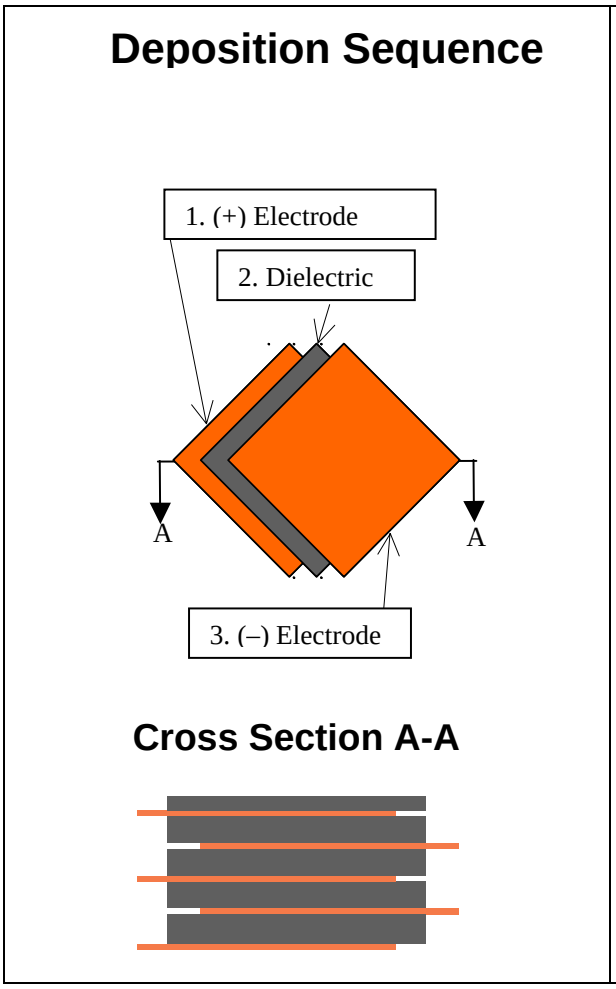

Figure 4 Illustration shows the offsetting of multilayers to generate a nanolayered capacitor. The positive and negative electrodes are connected together on the left and right side of the capacitor, respectively.

Results and Discussion

Fabrication

The electrical performance of a capacitor is linked intrinsically to the quality of the dielectric. For the capacitors in this study, the dielectric is niobium oxide. In reactive sputtering, an oxygen partial pressure regime can be established with the deposition rate vs. reactive gas flow technique. Figure 5 presents the reactive sputtering hysteresis curve of plasma emission intensity as a function of oxygen flow during Nb deposition. The plasma

emission monitor was tuned to 410 nm, a wavelength of an intense niobium ion emission line. At zero oxygen flow, the target is in the condition of sputtering with a metallic deposition rate. As the oxygen flow increases from zero to 27 sccm (filled diamonds), the target is slowly oxidized, the oxidized area encroaches into the surface for metallic sputtering, and the ejected niobium metal concentration decreases, as indicated by a decrease in the plasma intensity from 1.0 to 0.7. At an oxygen flow of around 27 sccm, there is a rapid decrease in the normalized plasma intensity from 0.7 to < 0.1. This target condition is called the "fully" oxidized state. The target recovers to the metallic state if one decreases the oxygen flow to zero as indicated in the figure.

The PEM was integrated into the control loop of the oxygen mass flow controller so that oxides could be deposited in the oxygen flow regime of 27 sccm where the target is significantly, but not fully, oxidized. The intent was to find the minimum oxygen flow required to produce the best oxide. Four oxide coatings were reactively sputtered (open diamonds) using feedback control from the PEM. The visual quality of the oxides is annotated in the figure, showing that the best oxide, as defined by transparency in the visible regime, is nearly the same as sputtering the niobium target in a fully oxidized state.

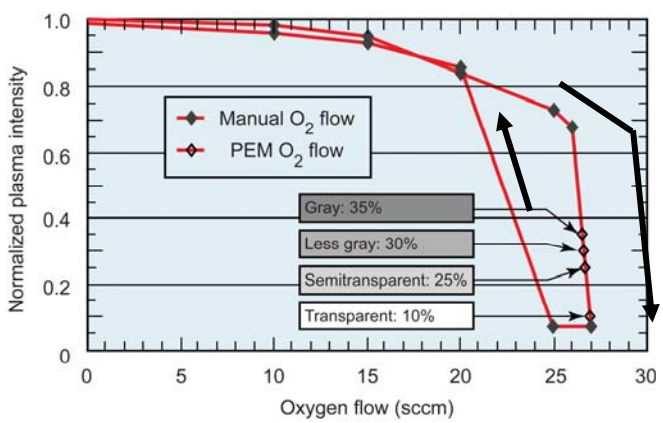

Figure 5. Reactive sputtering hysteresis curve. The plasma intensity is taken at 410 nm, one of the Nb ion emission wavelengths. Arrows indicate direction of oxygen flow change.

Process Variables

Two sputtering process variables were selected to make single-layer capacitors for electrical characterization. One variable is the amount of oxygen, represented by the oxygen-to-argon flow ratio. From Figure 5, the minimum ratio is 0.30, and we chose the maximum ratio of 1.0 and a middle ratio of 0.72. The motivation for increasing the oxygen flow (concentration) is to assure as complete an oxidation as possible of the Nb metal species arriving at the substrate. The other variable is the target voltage, which was changed by the power set point. The motivation here is to increase the average energy of the reaction species, oxygen and Nb, to again assure as complete an oxidation as possible at the surface of the substrate.

The oxide deposition rates area given in Table 1 as a function of the target voltage and O_2/Ar gas ratios. The rates increase with target voltage at fixed gas ratio. The rate increases because the power applied to the target is increased to drive the target voltage higher. The oxide deposition rates do increase with the flow ratio when the target was at 540 V, does not vary significantly at 600 V, and decreases with flow ratio at 660 V. There is no consistent trend, or explanation, of why the deposition rate varies with target voltage in this fashion. The higher deposition rates are desirable for throughput purposes. The oxide deposition rates are between 0.2 and 0.7 nm/s in this process space, which means it takes 4.2 to 1.2 hrs, respectively, to make a single-stack (nominally 5 nF) capacitor.

Table 1. Niobium oxide deposition rates (nm/s) in the target voltage and O_2/Ar gas ratio process space.

O_2/Ar flow ratio	540 V	600 V	660 V
0.30	0.13	0.36	0.67
0.72	0.20	0.32	0.46
1.00	0.28	0.36	0.38

Electrical properties

Single-stack capacitors were made in the process space described above for electrical characterization. The field strength and dissipation factor are given in Tables 2 and 3, respectively. Note that the higher field strengths and lower dissipation factors occur at the lower target voltages (540 V) and lower gas ratios (0.3). The reason for the degraded electrical properties at the high gas ratios was obvious by visual inspection. An excess of gas pressure produced oxide layers that scattered light from the roughened surface of the dielectric. Rough surfaces contain asperities that lead to low-voltage breakdowns. A rough surface is indicative of higher porosities and surface areas within the coating. This may contribute to higher dissipation factors because of increased conduction paths along these internal surfaces.

For a given gas flow ratio, electrical performance improves as the oxide deposition rate decreases. One explanation may be that at the low deposition rates, there is more time for the oxidation reaction to occur before the next population of sputtered metal atoms arrives. There is also more time for surface atoms to diffuse and bind in positions of lower energy states. The oxide may be more stoichiometric and stable. Other process variables that can affect field strengths are magnetron arcing and cleanliness. Arcing and a heavily coated magnetron tend to spew out debris into the substrate. The debris grows laterally in size with the coating thickness [2] and becomes a likely breakdown path. This type of seeding defect may be more prevalent during high deposition rates.

Table 2. Capacitor field strength (MV/cm) as a function of target voltages and O_2/Ar gas flow ratios.

O_2/Ar flow ratio	540 V	600 V	660 V
0.30	3.70	3.57	2.79
0.72	3.30	3.50	3.51
1.00	2.88	2.95	2.00

Table 3. Dissipation Factor (mD) as a function of target voltage and O_2/Ar gas flow ratio.

O_2/Ar flow ratio	540 V	600 V	660 V
0.30	14.5	13.2	81.2
0.72	16.2	37.7	422
1.00	70.4	246	300

A particular run of single-stack capacitors produced 35 capacitors with an average capacitance of 5.3 ± 0.9 nF and an average dissipation factor of 5.3 ± 1.4 mD. In this run, one capacitor had the maximum electric field strength of 4.8 MV/cm and an energy density of 31.8 Joules/cc.

Conclusions

High-energy-density capacitors were made with a reactive sputter deposition process and shadow masking. The oxygen-to-argon flow ratio is an important driver of capacitor performance. The ratios less than 0.30, the oxide is absorbing and substoichiometric. At ratios greater than 0.80, the oxide coating is rough and porous. And within this process space, capacitors made at target voltages less than 600 V tend to have lower dissipation factors. A capacitor with field strengths as high as 4.8 MV/cm and a dissipation factor as low as 5.3 mD was produced.

Acknowledgements

This work performed under the auspices of the U.S. Department of Energy by Lawrence Livermore National Laboratory under Contract DE-AC52-07NA27344. This document is referenced as UCRL-PROC-400947.

References

1. Milton Ohring, The Materials Science of Thin Films, Academic Press, 1992, chapter 3, sections 6 and 7.

2. Steve Letts et al., “Ultra-smooth plasma polymerized coatings for laser fusion targets,” J. Vac. Sci. Tech, 19(3), 1981, 739–742.